UNIVEX High Vacuum Experimentation Systems

General

The UNIVEX system family was developed by Leybold for applications in research and development as well as for setting up pilot production units.

Their range of applications focuses chiefly on vacuum coating technology as well as vacuum process engineering experiments.
The multi-purpose experimentation systems from Leybold are modular and can be specified according to specific customer requirements. For this purpose, a corresponding questionnaire is provided on the last pages of this chapter.

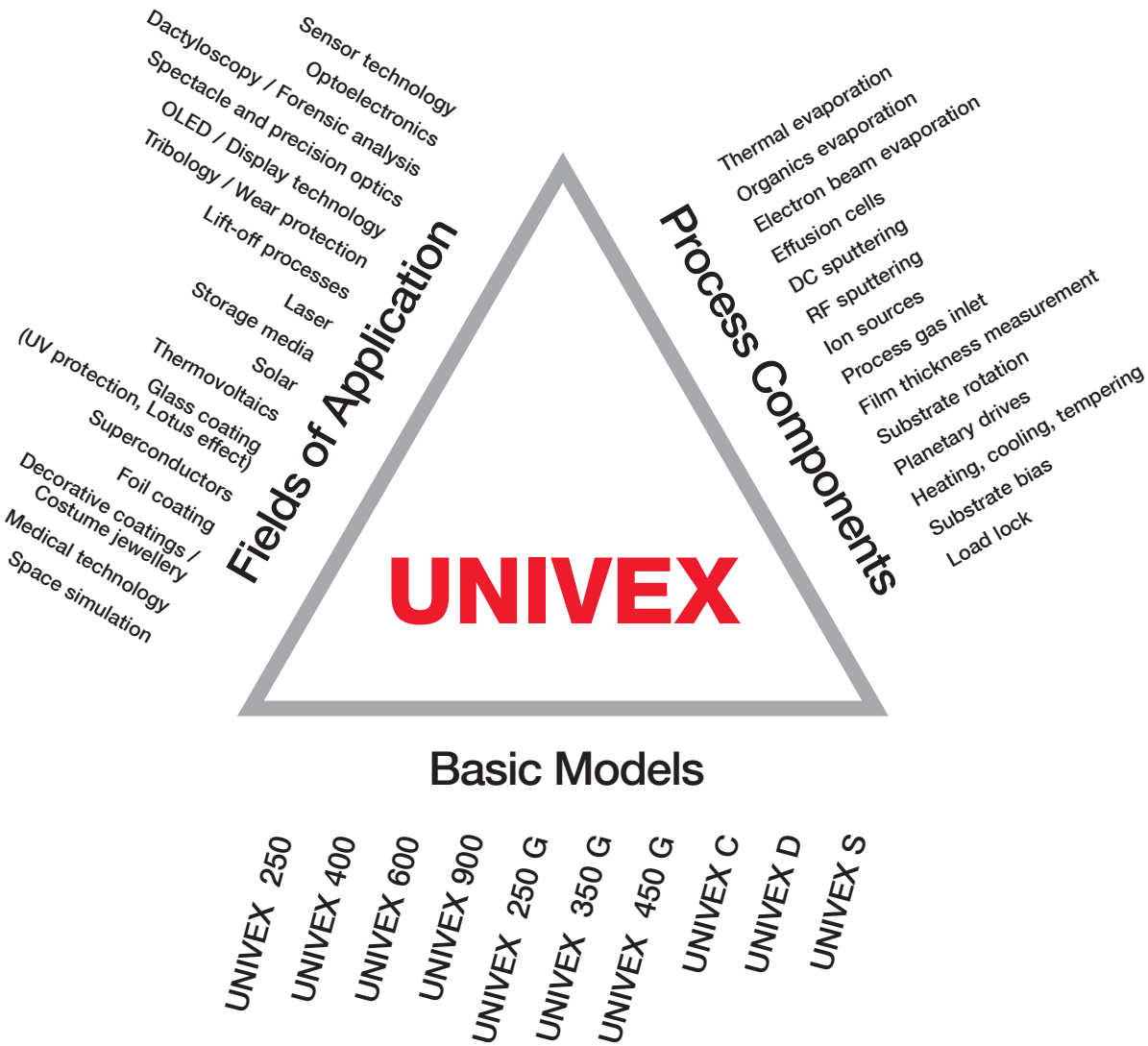

Contents

Box Coating Systems

Multi-purpose Vacuum Coating System for the Laboratory

Design

- Compact unit with direct access to the process chamber
- The UNIVEX box coaters systems consist of a process and a control module
- The process module includes the vacuum chamber, the coating components and the pump system
- The control module includes the PLC, respectively PC controller including the visualisation as well as the power supplies for the process components

Vacuum Chamber

- Box-shaped stainless steel vacuum chambers UNIVEX 250-600
- Octagonal stainless steel vacuum chamber UNIVEX 900
- Hinged front door for simple chamber access
- Viewing window with coating protection
- Removable stainless steel coating protection panels
- Flexible connections for chamber bottom and chamber top
- Connecting flanges for pump system and process components
- Coolable and heatable chamber walls optional

Vacuum System

- Mechanical forevacuum pump (dry compressing or oil sealed)
- High vacuum pump (turbomolecular or cryo pump)
- Vacuum valves
- Pressure measurement devices

Advantages to the User

- Modular system design
- Application-wise optimised pump system
- Multi-purpose vacuum chamber
- Convenient access to the chamber installations
- Very simple to operate and use via programmable control
- Suited for retrofitting of process components (configuration dependent)
- For installation into clean-room walls

Basic Models

UNIVEX 250

UNIVEX 400

UNIVEX 600

UNIVEX 900

UNIVEX 250

Design example UNIVEX 250

The UNIVEX 250 is a cost-effective and compact entry-level coating system for the laboratory.
Owing to its low height of only approximately 1.2 meters it is ideally placed on a benchtop or installed in a frame.
In the vacuum chamber which is 270 mm wide, substrates up to an overall diameter of 220 mm max. can be rotated and coated.
The integrated PLC controller allows you to run manual, respectively semi-automatic coating processes.

Examples of equipped vacuum chambers

Chamber bottom:
double thermal evaporator with source shutter
Chamber top:
rotating substrate table with substrate shutter

Electron beam evaporator with fourfold rotating crucible as well as additional double thermal evaporator, each with source shutter

Effusion cell as well as spare blank flanges for subsequent retrofits

Technical Data — UNIVEX 250

Vacuum chamber		
Material		
Chamber body		Stainless steel
Chamber door		Aluminum
Dimensions		
Inside width	mm	270
Inside depth	mm	370
HInside height	mm	400
Connections [1]		
Front side		Door with window
Rear side	DN	1x 160 ISO-K (pump system connection), 2 x 16 ISO-KF, 1 x 25 ISO-KF, 2 x 40 ISO-KF
Bottom plate		Variable connections
Cover plate		Variable connections
High vacuum pump [1]		TURBOVAC 350 i
Nominal pumping speed for N_2	l/s	290
Backing pump [1]		SOGEVAC SV 10 B
Nominal pumping speed	m^3/h	11
Controller		PLC with graphic touchscreen
Required supplies		
Voltage		400 V, 3 phases / N / 50 Hz [2]
Cooling water		
Inlet pressure	bar (abs.)	4 to 6
Consumption, approx.	l/min	Dependent on chamber installations
Feed temperature	°C	+18 to +25
Compressed air	bar (abs.)	4 to 6
Weight, approx.	kg	300 [3]

[1] Standard configuration, other hole patterns / flanges / viewing windows / pumps upon request
[2] Other voltages and frequencies upon request
[3] Total weight without chamber installations/process components

Ordering Information — UNIVEX 250

	Part No.
UNIVEX 250	**upon request**

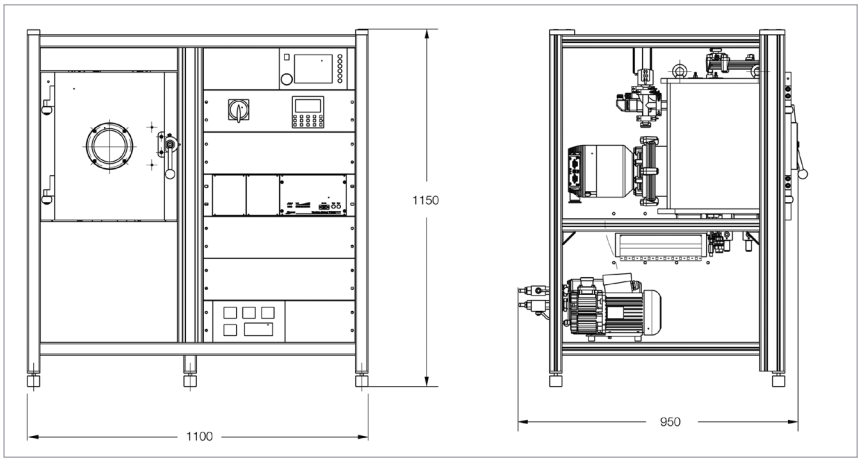

Dimensional drawing for the UNIVEX 250

UNIVEX 400

Design example UNIVEX 400

The UNIVEX 400 is a compact coating system for laboratory tasks, respectively pilot production runs.
Due to its chamber dimensions, it is ideal for coating of small to medium-sized substrates.
In the vacuum chamber which is 420 mm wide, substrates respectively substrate holders up to an overall diameter of 350 mm max. can be rotated and coated.
The integrated PC/PLC controller allows you to run manual, semiautomatic and fully automatic coating processes.

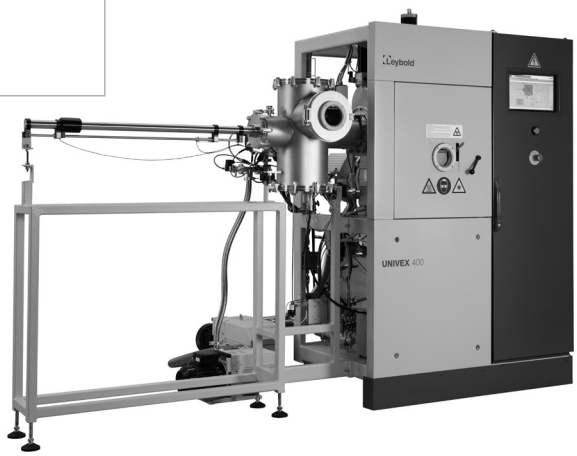

UNIVEX 400 with loadlock

Examples of equipped vacuum chambers

Two magnetron sputter sources, confocal aligned to the substrate holder rotating at the chamber top. Spare flanges for two further sputter sources

At the foreground: two double thermal evaporators with source shutters
In the background: two organics evaporators with source shutters and two film thickness gauge heads

Technical Data — UNIVEX 400

Vacuum chamber		Water-cooled
Material		
Chamber body		Stainless steel
Chamber door		Stainless steel
Dimensions		
Inside width	mm	420
Inside depth	mm	480
HInside height	mm	550
Connections [1]		
Front side		Door with window
Rear side	DN	1x 200 ISO-K (pump system connection), 2 x 16 ISO-KF, 2 x 40 ISO-KF, 2 x 40 ISO-KF
Bottom plate		Variable connections
Cover plate		Variable connections
High vacuum pump [1]		TURBOVAC 450 i
Nominal pumping speed for N_2	l/s	430
Backing pump [1]		SOGEVAC SV 25 B
Nominal pumping speed	m^3/h	26
Controller		PLC with graphic touchscreen
Required supplies		
Voltage		400 V, 3 phases / N / PE / 50 Hz [2]
Cooling water		
Inlet pressure	bar (abs.)	4 to 6
Consumption, approx.	l/min	Dependent on chamber installations
Feed temperature	°C	+18 to +25
Compressed air	bar (abs.)	4 to 6
Weight, approx.	kg	500 [3]

[1] Standard configuration, other hole patterns / flanges / viewing windows / pumps upon request
[2] Other voltages and frequencies upon request
[3] Total weight without chamber installations/process components

Ordering Information — UNIVEX 400

	Part No.
UNIVEX 400	**upon request**

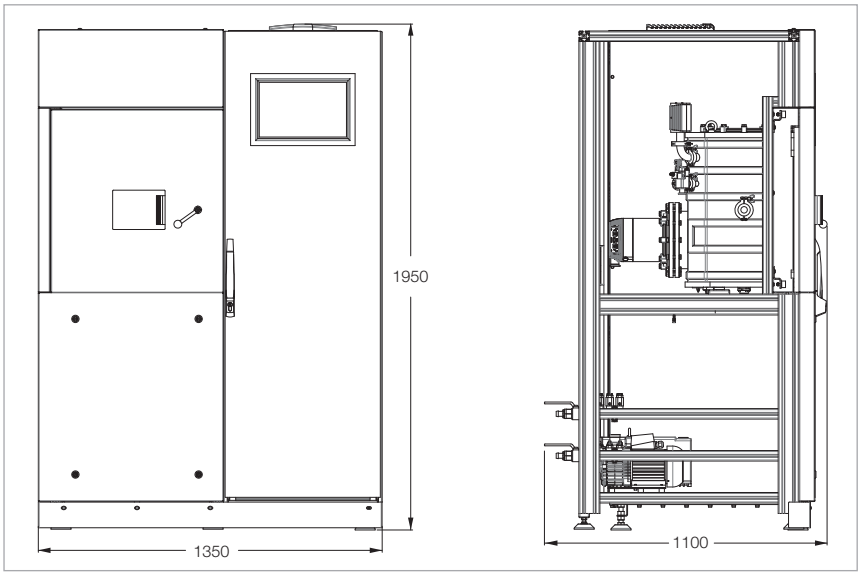

Dimensional drawing for the UNIVEX 400

UNIVEX 600

Design example UNIVEX 600

The UNIVEX 600 is a compact coating system for the laboratory, respectively pilot production runs.
Because of its chamber size it is suited for medium to large substrate sizes.
The attainable substrate throughput meets the general requirements for small series production runs.
In the vacuum chamber which is 600 mm wide, substrates respectively substrate holders up to an overall diameter of 550 mm max. can be rotated and coated.
The integrated PC/PLC controller allows you to run manual, semiautomatic and fully automatic coating processes.

Examples of equipped vacuum chambers

Chamber bottom: electron beam evaporator with sixfold rotating crucible
Chamber top: planetary drive for substrate rotation

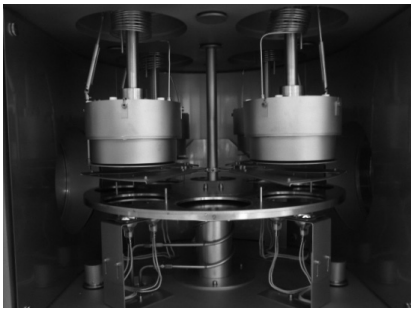

Chamber bottom: rotating substrate table with four heating stations
Chamber top: four magnetron sputter sources

Multiple targets for ion sputtering

Technical Data

UNIVEX 600

Vacuum chamber		Water-cooled
Material		
Chamber body		Stainless steel
Chamber door		Stainless steel
Dimensions		
Inside width	mm	600
Inside depth	mm	600
HInside height	mm	800 (550 sputter version)
Connections [1]		
Front side		Door with window
Rear side	DN	1x 250 ISO-K (pump system connection), 2 x 16 ISO-KF, 2 x 25 ISO-KF, 2 x 40 ISO-KF
Bottom plate		Variable connections
Cover plate		Variable connections
High vacuum pump [1]		TURBOVAC MAG W 1300 iP
Nominal pumping speed for N_2	l/s	1100
Backing pump [1]		SOGEVAC SV 65 B
Nominal pumping speed	m^3/h	59
Controller		PLC with graphic touchscreen
Required supplies		
Voltage		400 V, 3 phases / N / PE / 50 Hz [2]
Cooling water		
Inlet pressure	bar (abs.)	4 to 6
Consumption, approx.	l/min	Dependent on chamber installations
Feed temperature	°C	+18 to +25
Compressed air	bar (abs.)	4 to 6
Weight, approx.	kg	1000 [3]

[1] Standard configuration, other hole patterns / flanges / viewing windows / pumps upon request
[2] Other voltages and frequencies upon request
[3] Total weight without chamber installations/process components

Ordering Information

UNIVEX 600

	Part No.
UNIVEX 600	**upon request**

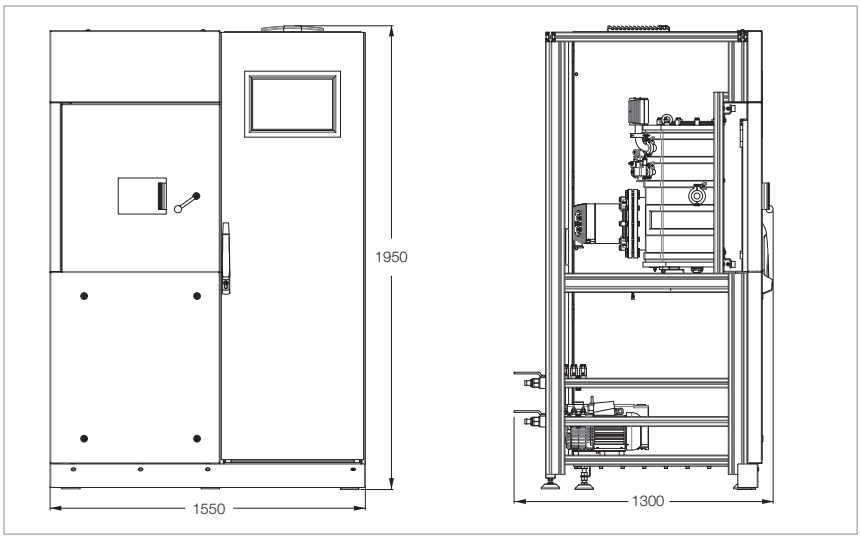

Dimensional drawing for the UNIVEX 600

UNIVEX 900

Design example UNIVEX 900

The UNIVEX 900 is the sophisticated solution for medium to large substrate sizes, respectively for higher substrate throughputs.
In the octagonal vacuum chamber which is 900 mm wide, substrates respectively substrate holders up to an overall diameter of 800 mm max. can be rotated and coated.
The integrated PC/PLC controller allows you to run manual, semiautomatic and fully automatic coating processes

Examples of equipped vacuum chambers

Chamber bottom: electron beam evaporator, thermal evaporator, ion source
Chamber top: rotating substrate dome with turnover device

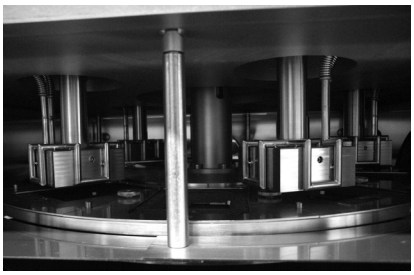

Rotating substrate table at the chamber top for 10 substrates (in situ combinable with five masks) + 4 high-temperature thermal radiation heaters on the rear

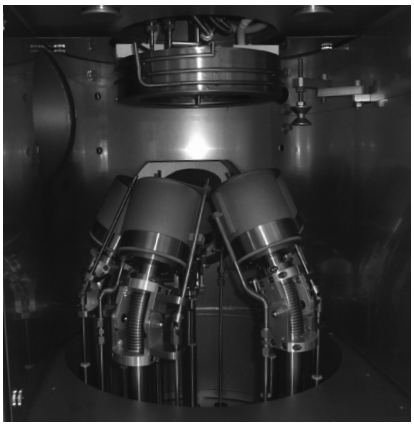

Confocal sputter-up arrangement with rotating high-temperature substrate heater

Technical Data

UNIVEX 900

Vacuum chamber		Water-cooled
Material		
Chamber body		Stainless steel
Chamber door		Stainless steel
Dimensions		
Inside width	mm	900 (octagonal)
Inside depth	mm	900 (octagonal)
HInside height	mm	1100
Connections [1]		
Front side		Door with window
Rear side	DN	2x 250 ISO-K (pump system connection), 2 x 16 ISO-KF, 2 x 25 ISO-KF, 2 x 40 ISO-KF, 1 x DN 63 ISO-KF
Bottom plate		Variable connections
Cover plate		Variable connections
High vacuum pump [1]		TURBOVAC W 2200 iP
Nominal pumping speed for N_2	l/s	2100
Backing pump [1]		SOGEVAC SV 100 B
Nominal pumping speed	m^3/h	97.5
Controller		PLC with graphic touchscreen
Required supplies		
Voltage		400 V, 3 phases / N / PE / 50 Hz [2]
Cooling water		
Inlet pressure	bar (abs.)	4 to 6
Consumption, approx.	l/min	Dependent on chamber installations
Feed temperature	°C	+18 to +25
Compressed air	bar (abs.)	4 to 6
Weight, approx.	kg	1500 [3]

[1] Standard configuration, other hole patterns / flanges / viewing windows / pumps upon request
[2] Other voltages and frequencies upon request
[3] Total weight without chamber installations/process components

Ordering Information

UNIVEX 900

	Part No.
UNIVEX 900	**upon request**

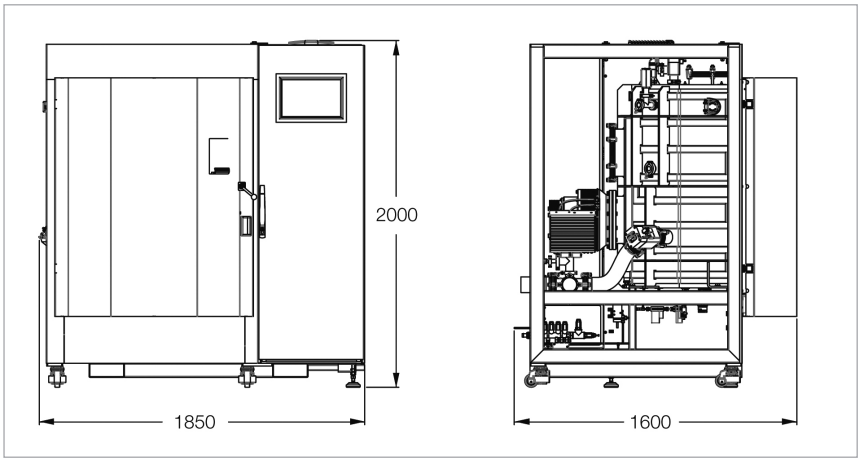

Dimensional drawing for the UNIVEX 900

Glove Box Systems

Multi-purpose Vacuum Coating System for Fitting to a Glove Box

The UNIVEX glove box systems were developed to coat materials which are sensitive with respect to the environmental conditions like oxygen or humidity, for example

Design

- The UNIVEX glove box systems consist of a process module and a separate electrical cabinet
- The process module includes the vacuum chamber, the coating components and the pump system
- The control module includes the PLC, respectively PC controller including the visualisation as well as the power supplies for the process components

Vacuum Chamber

- Box-shaped stainless steel vacuum chambers UNIVEX 250 G – 450 G
- Sliding front door for easy chamber access through the glove box
- Swivelling rear door for simple chamber access
- Viewing window with coating protection
- Removable stainless steel coating protection panels
- Flexible connections for chamber bottom and chamber top
- Connecting flanges for pump system and process components

Vacuum System

- Mechanical forevacuum pump (dry compressing or oil sealed)
- High vacuum pump (turbomolecular or cryo pump)
- Vacuum valves
- Pressure measurement devices

Advantages to the User

- Modular system design
- Application-wise optimised system
- Flexible utilisation of the vacuum chamber
- Space saving installation to the rear of the glove box
- Convenient process access through the glove box by means of a front sliding door
- Easy access to the chamber unit through the rear service door
- Very simple to operate and use
- Suited for retrofitting of process components (configuration dependent)
- All system components with exception of the sliding door are accessible from outside the glove box

Design example
UNIVEX 350 G, consisting of electrical cabinet (left) and coating module (right)

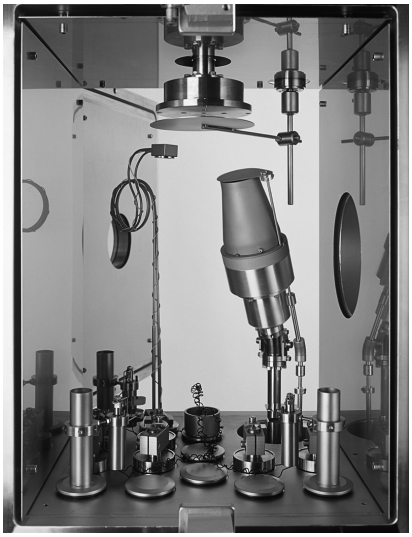

View through the vacuum chamber: front sliding door and rear swivelling door open
Design example with sputter source (right) and heated substrate table (top)

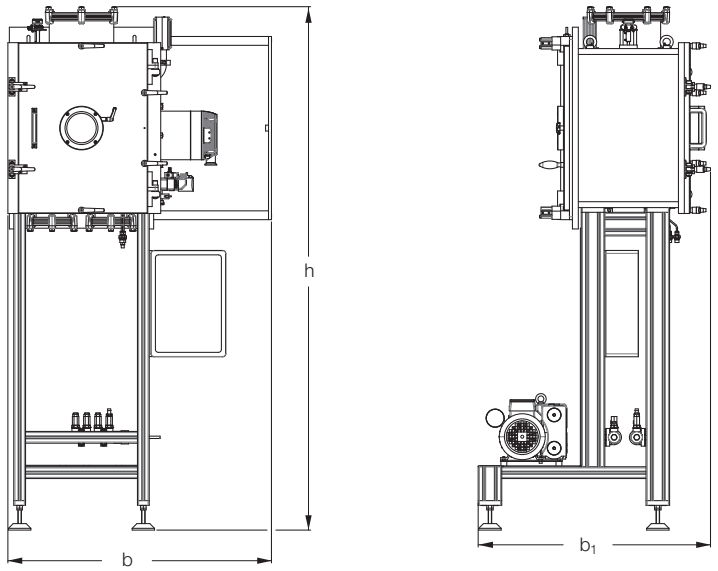

Type	h	b	b_1
UNIVEX 250 G	1700	700	800
UNIVEX 350 G	1800	900	800
UNIVEX 450 G	1950	1150	1000

Dimensional drawing of the glove box units, shown without process installations

Complete Solutions, including Glove Box

Upon request Leybold will also arrange the delivery of turnkey solutions consisting of the UNIVEX 350 G coating system and a glove box from a single source.

For this, please ask us for a quotation.

UNIVEX 350 G rear side

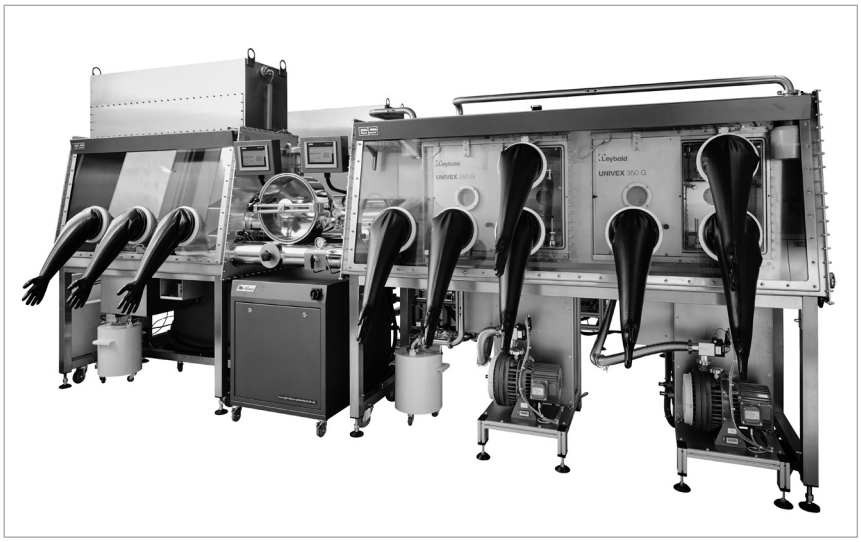

Glove box system with UNIVEX 350 G coating modules fitted to the rear

UNIVEX 250 G

The UNIVEX 250 G is a convenient and cost-effective solution for coating tasks requiring not much space.

Substrates, respectively substrate holders up to an overall diameter of approximately 220 mm can be processed.

Technical Data

		UNIVEX 250 G
Vacuum chamber		
Material		
Chamber body		Stainless steel
Front sliding door		Stainless steel
Rear swivelling door		Aluminum
Dimensions		
Inside width	mm	270
Inside depth	mm	370
HInside height	mm	400
Connections [1]		
Front side		Sliding door for glove box access; manually operated and pneumatically closing
Rear side		turning door for service access; manually locked
Bottom plate		Variable connections
Cover plate		Variable connections
Left side	DN	1x 160 ISO-K (pump system connection), 2 x 16 ISO-KF, 1 x 25 ISO-KF
High vacuum pump [1]		TURBOVAC 350 i
Nominal pumping speed for N_2	l/s	290
Backing pump [1]		SOGEVAC SV 10 B
Nominal pumping speed	m^3/h	11
Controller		PLC with graphic touchscreen
Required supplies		
Voltage		400 V, 3 phases / N / PE / 50 Hz [2]
Cooling water		
Inlet pressure	bar (abs.)	4 to 6
Consumption, approx.	l/min	Dependent on chamber installations
Feed temperature	°C	+18 to +25
Compressed air	bar (abs.)	4 to 6
Weight, approx.	kg	350 [3]

[1] Standard configuration, other hole patterns / flanges / viewing windows / pumps upon request
[2] Other voltages and frequencies upon request
[3] Total weight without chamber installations/process components

Ordering Information

	UNIVEX 250 G
	Part No.
UNIVEX 250 G	**upon request**

UNIVEX 350 G

The UNIVEX 350 G combines a compact design with plenty of chamber space.
For many coating tasks the UNIVEX 350 G offers optimum space conditions and operator convenience as to process components and substrate processing.

Substrates, respectively substrate holders up to an overall diameter of approximately 300 mm can be processed.

Technical Data

		UNIVEX 350 G
Vacuum chamber		
Material		
Chamber body		Stainless steel
Front sliding door		Stainless steel
Rear swivelling door		Stainless steel
Dimensions		
Inside width	mm	370
Inside depth	mm	380
HInside height	mm	500
Connections [1]		
Front side		Sliding door for glove box access; manually operated and pneumatically closing
Rear side		turning door for service access; manually locked
Bottom plate		Variable connections
Cover plate		1x 200 ISO-K, 4 x installation bore ø 34,5 mm
Left side	DN	1 x 160 ISO-K (pump system connection), 2 x 16 ISO-KF, 1 x 25 ISO-KF, 1 x 40 ISO-KF
High vacuum pump [1]		TURBOVAC 450 i
Nominal pumping speed for N_2	l/s	430
Backing pump [1]		SOGEVAC SV 25 B
Nominal pumping speed	m^3/h	26
Controller		PLC with graphic touchscreen
Required supplies		
Voltage		400 V, 3 phases / N / PE / 50 Hz [2]
Cooling water		
Inlet pressure	bar (abs.)	4 to 6
Consumption, approx.	l/min	Dependent on chamber installations
Feed temperature	°C	+18 to +25
Compressed air	bar (abs.)	4 to 6
Weight, approx.	kg	400 [3]

[1] Standard configuration, other hole patterns / flanges / viewing windows / pumps upon request
[2] Other voltages and frequencies upon request
[3] Total weight without chamber installations/process components

Ordering Information

	UNIVEX 350 G
	Part No.
UNIVEX 350 G	**upon request**

UNIVEX 450 G

Owing to its chamber dimensions, the UNIVEX 450 G is suited for all coating tasks requiring much space

Substrates, respectively substrate holders up to an overall diameter of over 400 mm can be processed.

With a height of 650 mm, the vacuum chamber is also suited for lift-off applications.

Technical Data

		UNIVEX 450 G
Vacuum chamber		
Material		
Chamber body		Stainless steel
Front sliding door		Stainless steel
Rear swivelling door		Aluminum
Dimensions		
Inside width	mm	500
Inside depth	mm	500
HInside height	mm	650
Connections [1]		
Front side		Sliding door for glove box access; manually operated and pneumatically closing
Rear side		turning door for service access; manually locked
Bottom plate		Variable connections
Cover plate		1x 250 ISO-K, 4 x installation bore ø 34,5 mm
Left side	DN	1 x 250 ISO-K (pump system connection), 2 x 16 ISO-KF, 1 x 25 ISO-KF, 1 x 40 ISO-KF
High vacuum pump [1]		TURBOVAC MAG W 700 iP
Nominal pumping speed for N_2	l/s	590
Backing pump [1]		SOGEVAC SV 40 B
Nominal pumping speed	m^3/h	44
Controller		PLC with graphic touchscreen
Required supplies		
Voltage		400 V, 3 phases / N / PE / 50 Hz [2]
Cooling water		
Inlet pressure	bar (abs.)	4 to 6
Consumption, approx.	l/min	Dependent on chamber installations
Feed temperature	°C	+18 to +25
Compressed air	bar (abs.)	4 to 6
Weight, approx.	kg	500 [3]

[1] Standard configuration, other hole patterns / flanges / viewing windows / pumps upon request
[2] Other voltages and frequencies upon request
[3] Total weight without chamber installations/process components

Ordering Information

	UNIVEX 450 G
	Part No.
UNIVEX 450 G	**upon request**

Notes

Cluster-Tool Systems UNIVEX C

Design example:
UNIVEX 450 C with coating module and electrical cabinet (example photograph).
The coating module consists of two process chambers (left and right) as well as the loadlock and transfer chamber in between
The substrate transfer between the chambers is effected with the aid of a vacuum robot

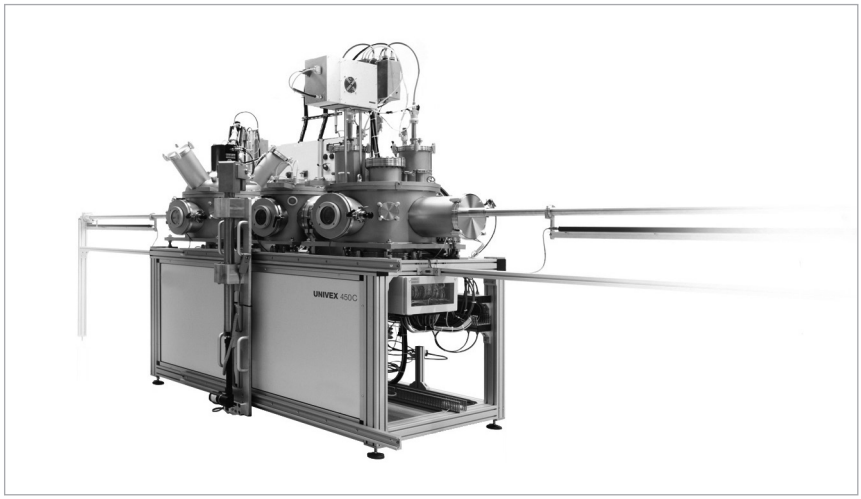

Design example:
UNIVEX 450 C with two process chambers as well as load lock chamber arranged at the centre. The substrates are moved using linear transfer rods (left and right)

For special applications we can also supply cluster systems based on the UNIVEX concept. These clusters are equipped according to customer requirements and incorporate separate processing, load lock and transfer chambers.

Frequently sputter applications are involved since sputter targets remain in place for a long time and because of this, the process chambers need to be vented rarely.
Generally, each vacuum chamber will have its own high vacuum system. The load lock chamber is in the simplest case loaded manually with individual substrates. In addition, magazine processing of several substrates per batch is possible.

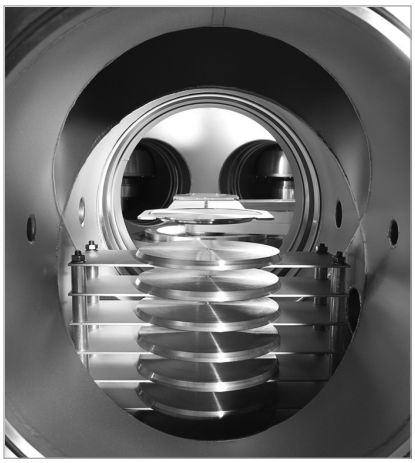

Design example:
Automatically controlled substrate magazine with robot arm access

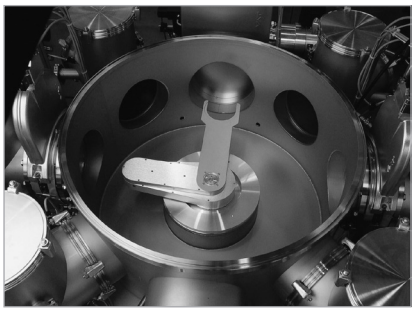

Design example:
Load lock chamber with central vacuum robot for substrate transportation into radially arranged process chambers

For transporting the substrates between the individual vacuum chambers, commonly motor driven robot arms or linear transfer drive units are used.

The UNIVEX control software is customised according to the specific application requirements and will generally allow fully automatic running of the process including recipe processing. Additional features like data logging, password protected and priority dependent user access as well as remote access for servicing can be optionally integrated.

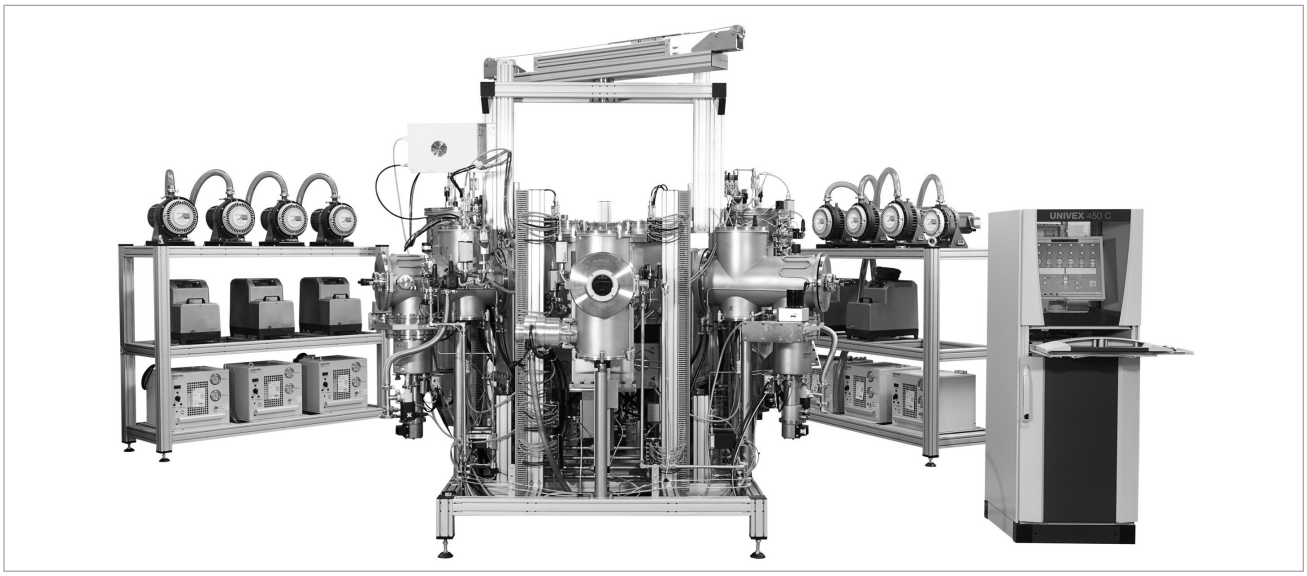

Design example:
Coating module (centre) with decentralised pump systems (left and right) and control console

Dactyloscopy Systems UNIVEX D

Leybold has developed a coating system, which relies on a recognized metal evaporation process to reveal fingerprints on items containing fingerprint evidence.

Benefits of this method

- Easily controllable thermal coating process
- Coating of large areas is possible up to 800 x 400 mm
- Short cycle times are possible (depending on the material with the fingerprint evidence)
- Good contrast on multicolor surfaces
- The material containing the fingerprint evidence remains undamaged

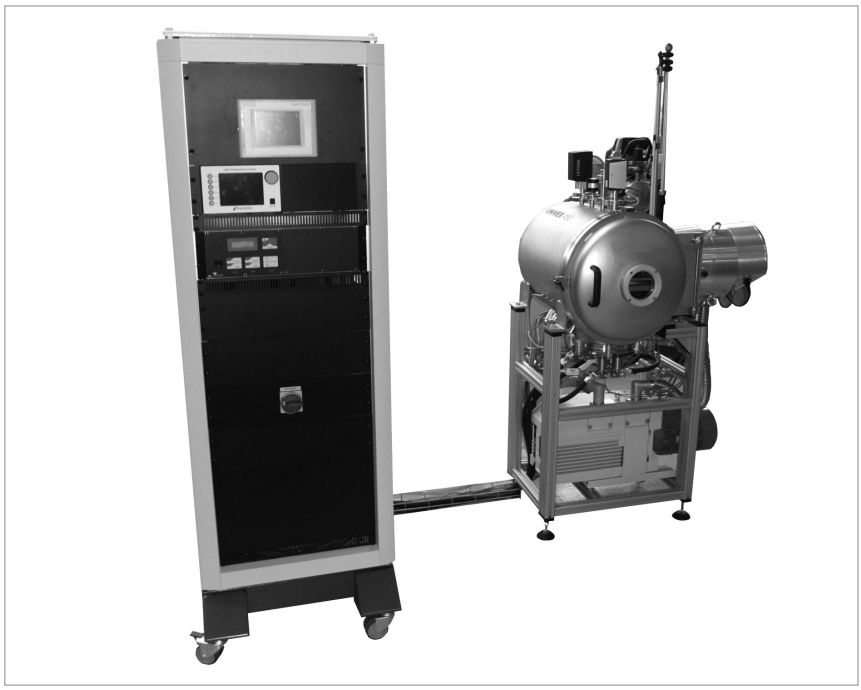

Design example:
UNIVEX 450 D, consisting of vacuum coating module (right) and separate electrical cabinet (left)

Opened coating chamber with retracted substrate receiver

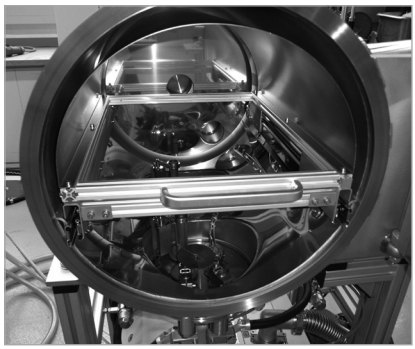

View into the chamber with thermal evaporator and positioned substrate receiver

Space Simulation Systems UNIVEX S

We are offering the UNIVEX S line for simulation of space conditions as well as other thermal vacuum experiments. It generally consists of a cylindrical vacuum chamber with high vacuum system and supply module with process controller.
The simulation chamber is typically equipped with temperature controllable trays and shrouds, which may be both heated and cooled, in a vacuum.
The process module is moved manually along rails so that the simulation chamber can be opened for loading

Design example:
UNIVEX 1000 S with closed simulation chamber

Opened chamber of the UNIVEX 1000 S with temperature controllable shrouds and substrate tray

Design example:
UNIVEX 700 S

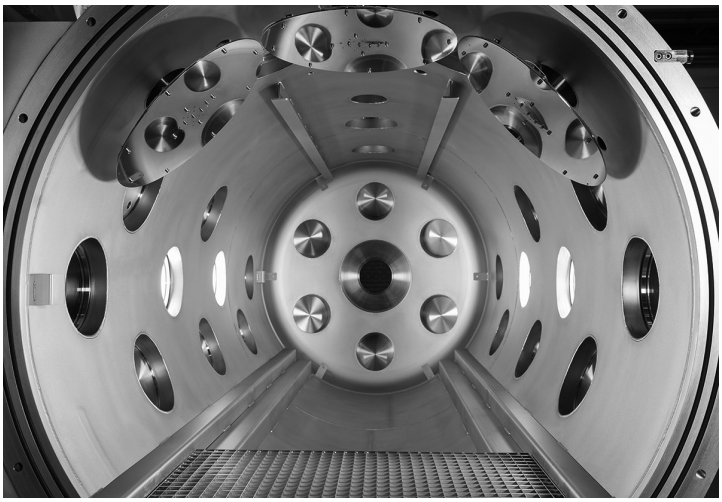

Sample:
UNIVEX S XTT

Process Accessories

Thermal Evaporation of High Melting Point Materials (metals)

Single Thermal Evaporator

Consisting of two water-cooled high voltage feedthroughs with terminal blocks for 34.5 mm dia. holes.

Single thermal evaporator

Technical Data — Single Thermal Evaporator

Rating per conductor	V A	max. 100 500
Seals		FPM
Water connection	mm	Hose 4/6 ⌀
Weight	kg	2.5

Ordering Information — Single Thermal Evaporator

	Part No.
Single thermal evaporator	**upon request**

Dual Thermal Evaporator

Consisting of three water-cooled high voltage feedthroughs with terminal blocks for 34.5 mm dia. holes.

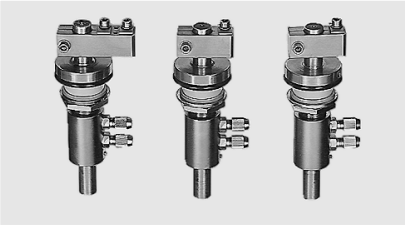

Dual thermal evaporator

Technical Data — Dual Thermal Evaporator

Rating per conductor	V A	max. 100 500
Seals		FPM
Water connection	mm	Hose 4/6 ⌀
Weight	kg	3.9

Ordering Information — Dual Thermal Evaporator

	Part No.
Dual thermal evaporator	**upon request**

High Current Cable

For single and dual thermal evaporators, equipped with terminals and clamping pieces.

Technical Data — High Current Cable

Length	m	2 [1]
Rating	V A	max. 100 500
Cross section	mm^2	120
Weight	kg	3.5

Ordering Information — High Current Cable

	Part No.
Power supply cable	**upon request** [2]

[1] Standard length. Other lengths can be specified
[2] For the single thermal evaporator, two high current cables are required
For the dual thermal evaporator, three high current cables are required

AS 153 High current power supply unit

For supplying thermal evaporators.

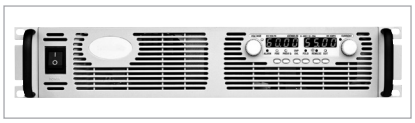

AS 153 high current power supply unit

Technical Data

Power Supply Unit

Cabinet		19" rack module, 2 HU Installation depth 520 mm
Output voltage/current, max.		8 V, 400 A
Inputs		Remote control unit for controlling the evaporation power (0 to 10 V)
Main power supply		230 V, 50/60 Hz, 10 A
Weight, approx.	**kg**	10

Ordering Information

Power Supply Unit

	Part No.
AS 153 high current power supply unit	**upon request**

Thermal Evaporation of Low Melting Point Materials (organics)

Organic material evaporators are special instruments based on the thermal principle developed to evaporate mostly temperature sensitive organic materials.
Such instrumentation ensures a coating process at precisely controlled heating temperatures in the range between 50 °C and 600 °C.

For installation within the UNIVEX systems, Leybold supplies organic material evaporators as a complete package, consisting of evaporator source, automatic evaporator shutter and 19" rack mount controller.

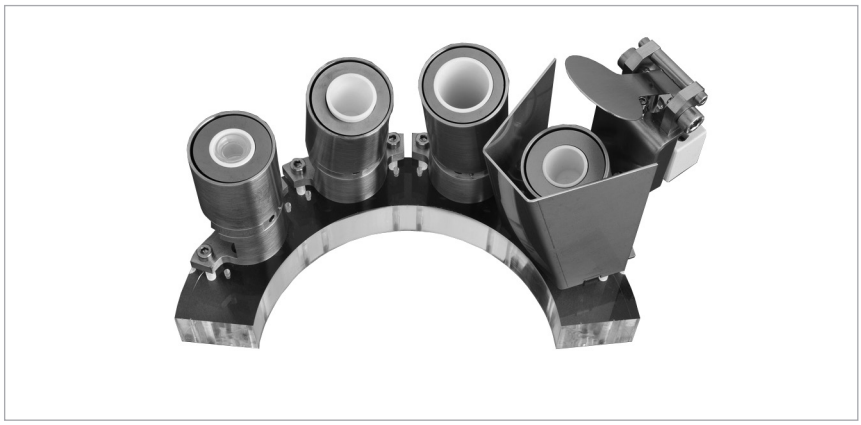

Four organic material evaporators, arranged in a semicircle

Single organic material evaporator with shutter, fitted to a DN 40 CF flange

Power supply unit for two organic material evaporators

Upon request we shall be pleased to provide an offer which specifically matches the requirements of your application.

Electron Beam Evaporation

Various models of electron beam evaporators and power supplies are available for installation in the UNIVEX systems.

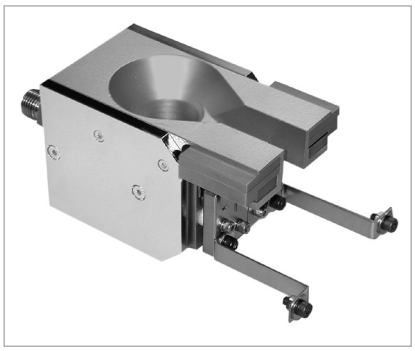

Electron beam evaporator with single crucible

Electron beam evaporator with rotatable six-pocket crucible

Electron Beam Evaporator

The selection of a suitable electron beam evaporator will primarily depend on the amount of available space, the desired evaporation rate and the film thickness as well as the number and type of materials which need to be evaporated. Single crucible as well as rotatable multi-crucible evaporators are available.

Power Supplies

The power supply unit for the individual electron beam evaporators is selected depending on the maximum evaporation power which is required, as well as the demanded properties for X/Y beam deflection. Models with output power ratings ranging from 3 kW to 10 kW are available.

Upon request we shall be pleased to provide an offer which specifically matches the requirements of your application.

Sputtering

Magnetron Sputter Sources

The magnetron sputter sources, which can be built into the UNIVEX systems, are DC/RF compatible. This means, they may be operated either with a DC or also with a RF power supply.
In addition, pulsed DC power supplies are possible.
Here as standard round planar sputter sources with target diameters ranging from 2-in. to 6-in. are available. Selection and equipping here depends on the substrate size to be coated, the specified sputtering process and the target material as well as the available installation space.
Other target sizes and magnetron types (rectangular sources, for example) are available upon request.

2-in. magnetron with in-situ tiltable sputter head, pneumatically actuated target shutter and gas feed

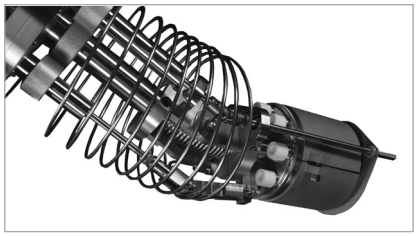

4-in. magnetron with in-situ tiltable sputter head, pneumatically actuated target shutter and gas feed

Confocal arrangement of 3-in. sputter sources, aligned for sputter-up

DC Power Supplies

For DC sputtering, power supply units with a rated output power ranging between 500 W and 3 kW are available. These are 19-in. rack mount units which can be installed in the UNIVEX cabinets.

RF Power Supplies

For RF sputtering, power supply units with a rated output power ranging between 300 W and 2 kW are available. These are 19-in. rack mount units which can be installed in the UNIVEX cabinets.

Moreover, automatically controlled RF matchboxes are supplied for impedance matching between the RF power supply and the magnetron.

Gas Inlet

Sputtering sources can only be operated with a process gas present. For this, manually operated variable leak valves or automatically controlled mass flow controllers are available options.

Throttling the Pumping Speed and Process Pressure Control

In order to protect the high vacuum pump against the high pressures present during plasma operation and to control the process pressure, the UNIVEX systems are fitted with suitable components for throttling the high vacuum pumping speed. These may be butterfly valves, control gate valves or also speed controlled turbomolecular pumps

Upon request we shall be pleased to provide an offer which specifically matches the requirements of your application.

Ion Sources

Ion sources are frequently used to either clean or etch the substrates before running the actual coating process, or to optimise the thin film properties during deposition. In the case of the latter process, the ion source serves to support the coating process (IBAD – Ion Beam Assisted Deposition). However, there are also some PVD processes, during which the ion source is directly needed to produce the thin films, for example during ion beam sputtering

As to design and operating principle, different types of ion sources are available, for example

- Gridded and gridless ion sources
- DC ion sources and RF ion sources
- Flange mounted ion sources and ion sources built in/aligned in the vacuum

Gridless DC ion source with filament for plasma neutralisation

Filamentless RF grid type ion source

We shall be pleased to assist you in connection with your UNIVEX application. For this, please ask us for a quotation.

Process Gas Inlet

In plasma supported processes (sputtering, etching, glow discharge, bias) or reactive deposition methods, generally a gas supply from the outside is necessary. The gas may be supplied either manually with a gas-dosing valve or program-controlled by way of a gas flow controller (MFC – Mass Flow Controller). The MFC control range is depending on the requirements between approximately 0 to 10 sccm and 0 to 500 sccm.

The available MFC models are equipped either with a 0 to 5 V analogue interface or a EtherCAT interface. The possible gases respectively gas mixtures within a UNIVEX system depend on the type of required application and the installed system hardware (in particular the pump system).

Mass Flow Controller (MFC)

For controlled inlet of gas in connection with automated plasma processes (sputtering, etching, glow discharge). The MFC is controlled by a PC or a PLC provided from the side of the customer.

Technical Data — Mass Flow Controller (MFC)

Gas flow, max.	**sccm**	selectable between 10 and 500
Supply voltage	**V DC**	24
Control interface		analog 0 – 5 V or EtherCAT

Ordering Information — Mass Flow Controller (MFC)

	Part No.
Mass flow controller	**upon request**

Variable Leak Valve with Isolation Valve

For manually controlled inlet of gas in connection with plasma processes (sputtering, etching and glow discharge).

Technical Data — Variable Leak Valve with Isolation Valve

Gas inlet rate q_L	**mbar x l/s**	5×10^{-6} to 1×10^{3}
Connection flange	**DN**	16 ISO-KF

Ordering Information — Variable Leak Valve with Isolation Valve

	Part No.
Variable leak valve with isolation valve	**215 010**

see also Catalog Part “Valves”

Please ask us for detailed information.

Film Thickness Measurement

Various thin film thickness measuring instruments may be installed in the UNIVEX units.

The selection depends on the measurements needed and the required degree of automation.

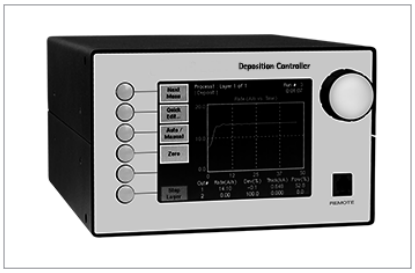

Example of a thin film controller

As standard, oscillating crystal systems are used. These may consist of one or several sensing heads with or without shutter, and upon request are available for UHV operation (i.e. are suitable for degassing).

The sensor head is driven either by a monitor (allowing only the measurement of deposition rate and film thickness) or by a controller (allowing measurement of the film parameters and control of the deposition rate).

Upon request we can provide an offer which specifically matches the requirements of your application.

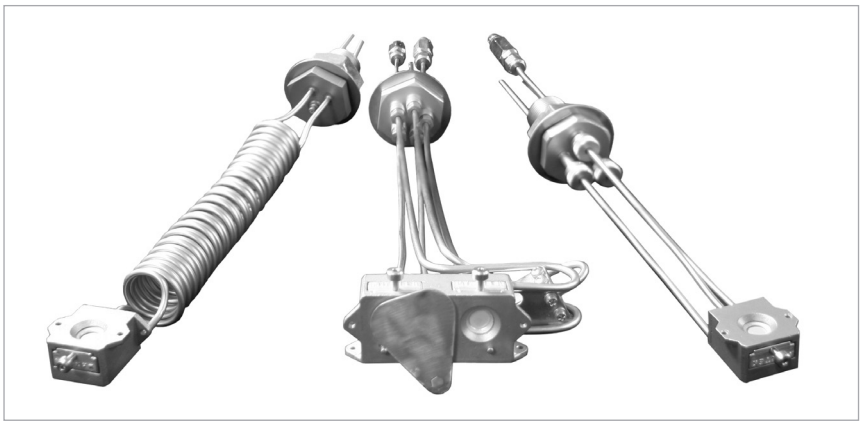

Examples of thin film measurement gauge heads

Substrate Rotation

To attain the desired film properties, a rotary movement of the substrates is very often necessary in deposition processes.

The Leybold UNIVEX system is available with a wide range of substrate rotation accessories.
A simple, manually operated rotation axis can be implemented just as a continuously revolving motor shaft or an angle positionable solution (for placement or transfer tasks).
In addition, coaxial drives with two independently operated rotating tables can be offered.

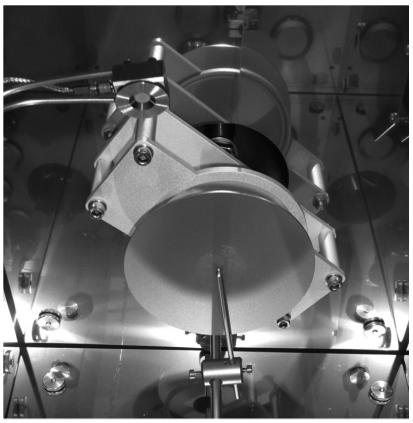

Motor driven rotary drive with a detachable substrate holder (bayonet coupling).
View from the bottom onto the closed substrate shutter

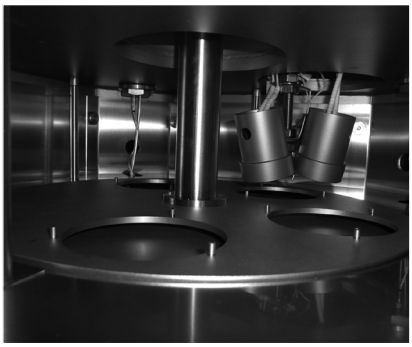

Coaxial hollow shaft drive for eccentric rotation and positioning of several substrates, with separate shutter table

Planetary Drives

For high demands regarding thickness uniformity of the deposited film, planetary drives are suitable. Here the substrates, which are to be coated, are placed on so-called planets. The planets revolve eccentrically about a central axis but they additionally rotate about their own centre point.

Different types of planetary drives are possible depending on the specific kind of task (size and number of substrates, angle of inclination, throughput times).

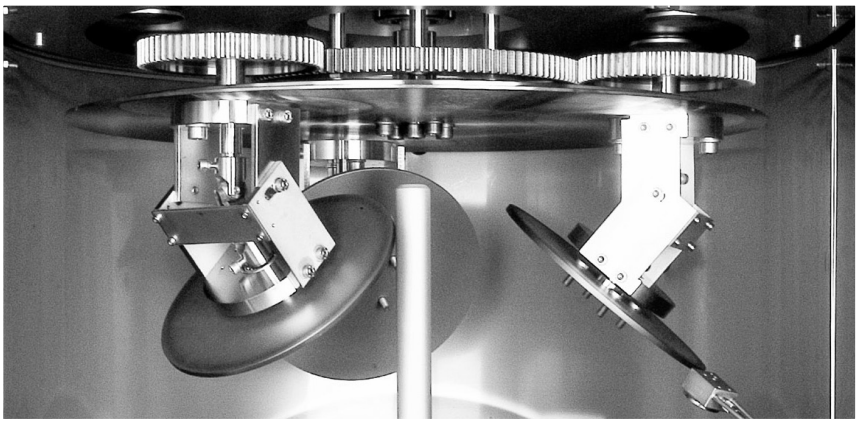

Planetary drive with gear drive and three planets, firmly installed, but where the angle is adjustable

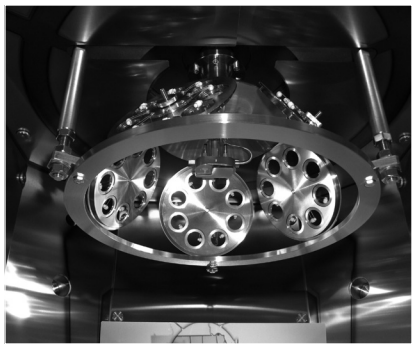

Planetary drive with central friction disc and five free-running planets

Our consulting experts are available to inform you about substrate movement options.
For these please ask us for a quotation.

Heating, Cooling, Tempering, Bias

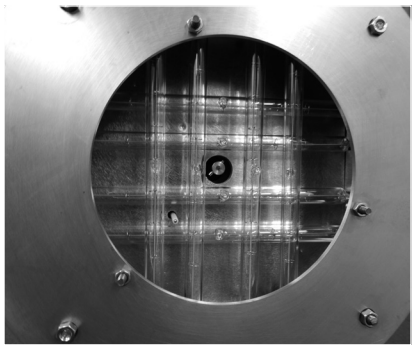

Rotatable thermal radiation heater with quartz lamps

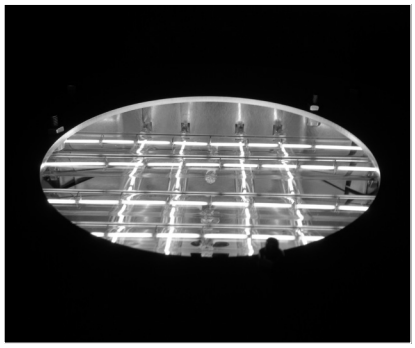

Rotatable thermal radiation heater with quartz lamps during heating operation

The thermal manipulation of substrates is an important method to optimise coating results. For this, Leybold Vacuum offers within the scope of its UNIVEX systems numerous solutions. Depending on requirements and technical feasibility, thermal solutions may also be combined with other properties for example rotation or substrate bias.

Substrate Heating

For temperature-controlled heating, different contact and thermal radiation heaters are available. The selection of the optimal solution depends above all on the desired temperature range, the substrate size and the substrate material.

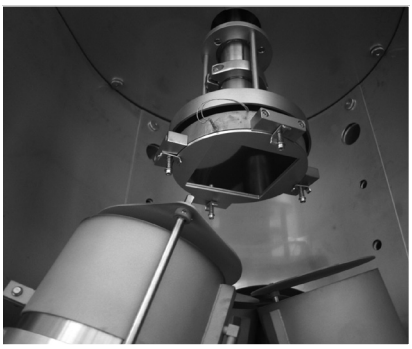

Rotating contact heater based on the resistance heating principle

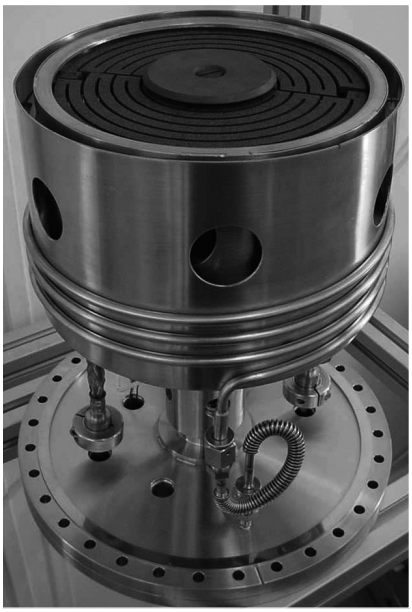

Rotating high temperature thermal radiation heater with SIC heating element

Substrate Cooling

Heat sensitive substrates or substrate coatings necessitate during the deposition process some kind of cooling. Leybold offers both inactively as well as actively cooled substrate holders. As cooling media, water, liquid nitrogen (LN_2) or special cooling liquids can be used.

Rotating and water-cooled substrate table

Substrate Tempering

Through the utilisation of a special temperature control liquid, it is possible to heat or also cool a substrate. The possible temperature range lies between approximately -50 °C and +150 °C for static substrate holders, respectively -20 °C and +100 °C for rotating substrate holders.

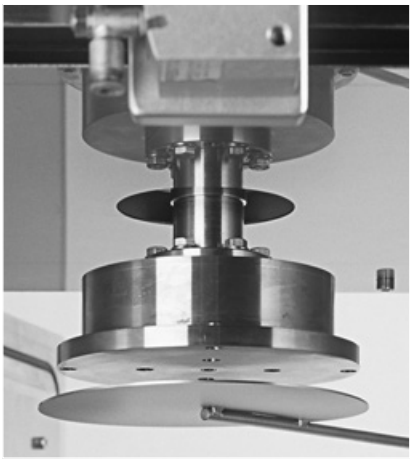

Rotatable and temperature controllable substrate holder with substrate shutter

Substrate Bias

Pre-cleaning of the substrate with RF or DC biasing prior to deposition can improve the adhesive properties of the film. Leybold offers insulated substrate holders and upon request matching power supplies.

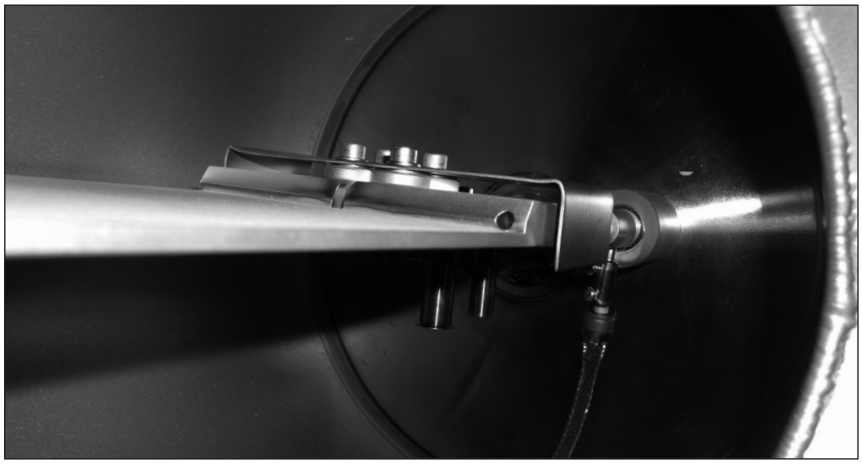

Insulated substrate fork with RF bias connection

Load Lock Systems

To improve the process conditions and to increase coating throughput, frequently additional load lock chambers are used. These are connected to the process chamber and are vacuum-wise separated by a gate valve. By means of a transport facility (linear transfer rod, vacuum robot or alike) the substrate is transported between the chambers.
The load lock system offers the advantage to save time during pumpdown and the ability to attain significantly better vacuum pressures in the process chamber, since it will not have to be vented when changing the substrates. Usually the load lock chamber will be significantly smaller compared to the process chamber.
Selection of the load lock chamber and the pump system as well as the design for the substrate transport facility depend on the specific kind of application.

We shall be pleased to assist you as to the possibilities offered by a load lock system in your UNIVEX application.

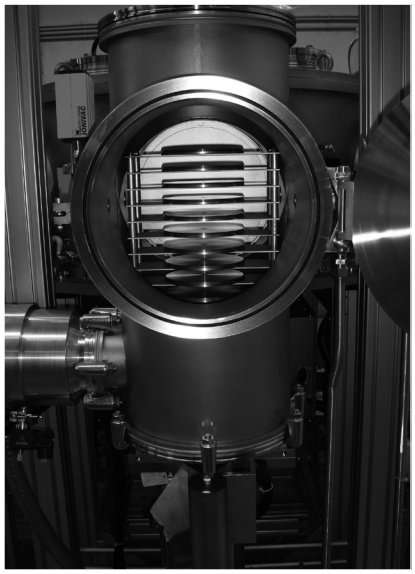

Manually operated load lock chamber with substrate magazine

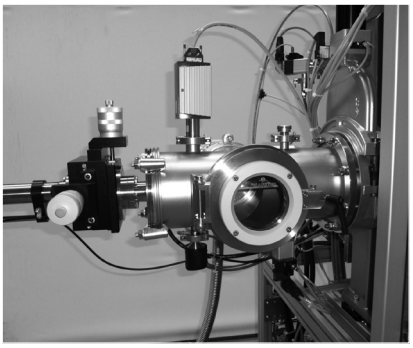

Load lock chamber for a single substrate with automatically operated linear transfer unit

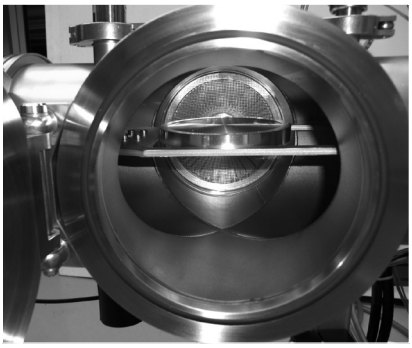

View into the opened load lock chamber onto the substrate end effector

General Accessories

Blank-Off Screw Fitting

For 34.5 mm dia. hole.

Blank-off screw fitting

Technical Data — Blank-Off Screw Fitting

Material		Stainless steel
Seal		FPM (FKM)
Weight	kg	0.1

Ordering Information — Blank-Off Screw Fitting

	Part No.
Blank-Off screw fitting	**030 40**

PS 113 A
Low Pressure Safety Switch

Safety interlock arrangements in connection with the UNIVEX system controller, respectively optionally connected power supply equipment (for sputtering or electron beam evaporation, for example).

PS 113 A Safety Switch

Technical Data — Low Pressure Safety Switch

Switching pressure	mbar	approx. 6 below atmospheric pressure
Return switching pressure	mbar	3 below atmospheric pressure
Switching inaccuracy	mbar	2
Switching contact		Changeover contacts, gold-plated, for prog. controls
Switching capacity	mA / V AC mA / V AC	100 / 24 30 / 24
Vacuum connection	DN	16 ISO-KF

Ordering Information — Low Pressure Safety Switch

	Part No.
Low Pressure Safety Switch PS 113 A, DN 16 ISO-KF; complete with 3 m long cable	**230 011**

see also Catalog Part “Measuring, controlling”

Overpressure Safety Valve

For protecting the vacuum chamber against atmospheric overpressure during gas inlet

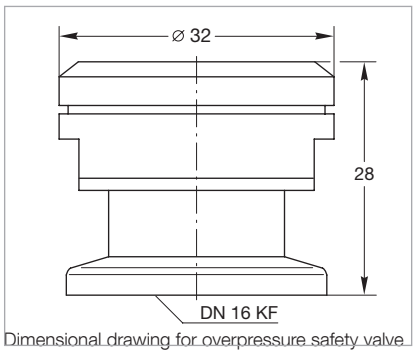

Dimensional drawing for overpressure safety valve

Technical Data — Overpressure Safety Valve

Responding pressure	mbar	1150 ± 40, over-pressure
Flow at 140 mbar	l/h	500
Valve disk		Spring loaded, with O-ring seal
Leak rate in the closed state	mbar x l/s (Torr x l/s)	$< 1 \times 10^{-8}$ ($< 0.75 \times 10^{-8}$)
Connection	DN	16 ISO-KF

Ordering Information — Overpressure Safety Valve

	Part No.
Overpressure Safety Valve	**890 39**

see also Catalog Part “High Vacuum Pumps”

Vacuum Feedthrough for the Transfer of Electrical Signals

For installation in a 34.5 mm diameter installation bore.
Connection on the side of the atmosphere through a six-way plug (included in the delivery).
Connection on the vacuum side through a plug with soldered contacts (included in the delivery).

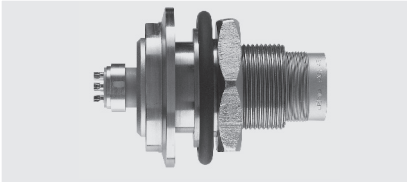

Vacuum feedthrough

Technical Data

		Vacuum Feedthrough
Rating per conductor	V A	max. 700 16
Seal		FPM (FKM)
Weight	kg	0.3

Ordering Information

	Vacuum Feedthrough
	Part No.
Vacuum feedthrough	**upon request**

Pneumatically Actuated Swivelling Shutter

For covering substrates or coating sources like thermal, respectively electron beam evaporators.
With pneumatic drive unit and shutter panel; for installation within installation bores having a diameter of 34.5 mm.

Technical Data

		Pneumatically Actuated Swivelling Shutter
Control voltage	V DC	24
Dimensions of the shutter panel	mm	upon consultation

Ordering Information

	Pneumatically Actuated Swivelling Shutter
	Part No.
Pneumatically actuated swivelling shutter	**upon request**

UNIVEX - Experimental vacuum coaters

Questionnaire

page 1

Customer ☐

Substrate

Max. substrate dimensions ☐
Substrate material(s) ☐
Substrate per batch ☐ pcs.

Substrate heating ☐ yes, max. temp. ☐ °C at Substrate ☐ or at heater ☐
Substrate cooling ☐ yes, min. temp. ☐ °C at Substrate ☐ or at cooler ☐
Substrate rotation ☐ yes
Substrate shutter ☐ yes

Substrate pre-treatment (cleaning)
Substrate bias ☐ RF ☐ DC
Ion beam ☐ yes
Sputter etching ☐ yes

Deposited film

Coating material(s) ☐
Layers per substrate ☐ pcs.

Any materials incompatible with your coating process (i.e. aluminum, copper, viton, etc.)

☐ yes, these materials are ☐

Deposition process

Thermal evaporation ☐ **yes**
Number of sources ☐ pcs.
Number of power supplies ☐ pcs.
Source shutter(s) ☐ yes

Electron beam evaporation ☐ **yes**
Number of guns ☐ pcs.
Number and size of pockets ☐ (e.g. 1 x 8cc, 4 x 8cc, 6 x 20cc ...)
Evaporating power ☐ 3 kW ☐ 5 kW ☐ 6 kW ☐ 10 kW
Source shutter(s) ☐ yes

Thickness measurement ☐ monitor ☐ controller

Magnetron sputtering ☐ **yes**
Target to substrate alignment ☐ confocal ☐ face to face
Source shutter(s) ☐ yes

Number of DC sputter sources ☐ pcs.
Target diameter ☐ 2" ☐ 3" ☐ 4" ☐ 6"
Targets with special size ☐
Number of DC power supplies ☐ pcs.

Number of RF sputter sources ☐ pcs.
Target diameter ☐ 2" ☐ 3" ☐ 4" ☐ 6"
Targets with special size ☐
Number of RF power supplies ☐ pcs.

Ion assisted deposition ☐ **yes**

UNIVEX - Experimental vacuum coaters

Questionnaire

page 2

Gas inlet (required for all plasma processes)

Required gases ☐

Gas inlet system ☐ MFC ☐ manual leak valve

Vacuum chamber

Best suited standard size ☐ yes

If not, then special size ☐

Chamber wall tempering ☐ cooling ☐ heating (by water, max. 65 °C)

Additional load lock system ☐ manual ☐ automatic ☐ with magazine for ☐ substrates

Pump system

Fore-vacuum pump ☐ dry ☐ oil-sealed

High vacuum pump ☐ cryo ☐ turbomolecular

Process pressure ☐ mbar/ Torr

Ultimate pressure ☐ mbar/ Torr

System control

(Standard is PLC with automatic pump system control and manual deposition control)

Manual process control ☐ yes (i.e. manual deposition steps)

Semi-automatic proc. control ☐ yes (i.e. automatic single deposition steps)

Automatic process control ☐ yes (i.e. automatic coating batches, recipe-processing)

Installation

Location

in a clean room completely ☐ yes

in the clean room wall ☐ yes

Main power supply

Voltage ☐ V

Number of phases ☐

Frequency ☐ Hz

Description of other process or system issues, if required

☐

☐

☐

☐

☐

☐

☐

Commercial aspects

Estimated budget ☐ currency ☐ EUR ☐ USD

Planned delivery date ☐

Calibration Systems

General

CS Calibration Systems

The requirements imposed on vacuum engineering with regard to accuracy of the measurements, reproducibility and unambiguity of the determined vacuum pressures have increased steadily over the last years

Routine calibrations of vacuum gauges are an important component of quality assurance schemes. The calibration systems from Leybold put the customer in a position to check and recalibrate on his own the specified and necessary accuracy of his vacuum gauges. Calibration systems are available for this purpose which cover a calibration range from 1000 mbar to 1 x 10^{-7} mbar (750 to 0.75 x 10^{-7} Torr).

Each system is equipped with several certified reference pressure sensors (transmitter standards), which each cover a part of the specified range of calibration pressures. In the pump system, turbomolecular pumps TURBOVAC with DIVAC diaphragm pumps are used. A variable leak valve is used to let the gas into the calibration chamber. In the case of the calibration system CS7, the gas inlet line is, moreover, equipped with it's own pump system.

The CS 3 mobile is an implementation which may be easily transported in a space saving manner. To this end it may be disassembled in to 2 parts for subsequent on-site reassembly.

The CS7 is equipped with a heater for the vacuum chamber, for the purpose of attaining lower chamber pressures more rapidly. The temperature of the heating collars can be controlled whereby the maximum degassing temperature will depend on the components installed (flanges, pressure sensors, valves).

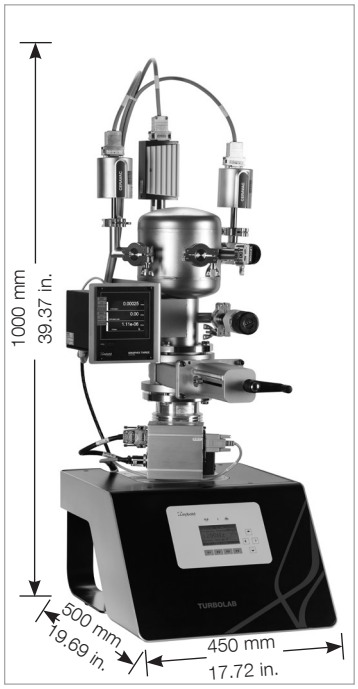

CS3 calibration system

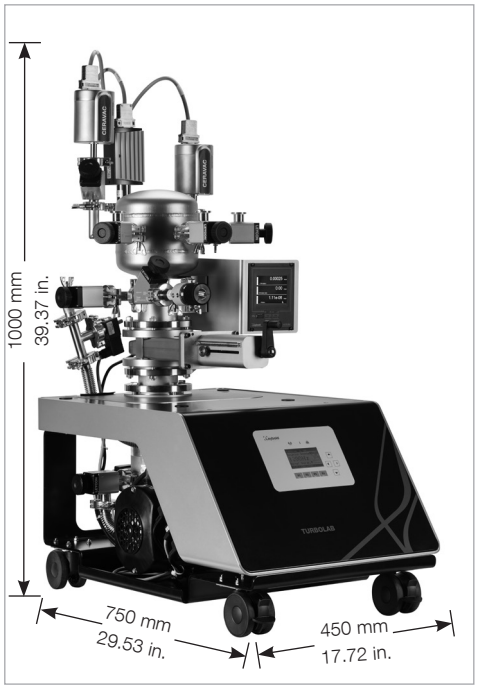

Calibration system CS3 mobile

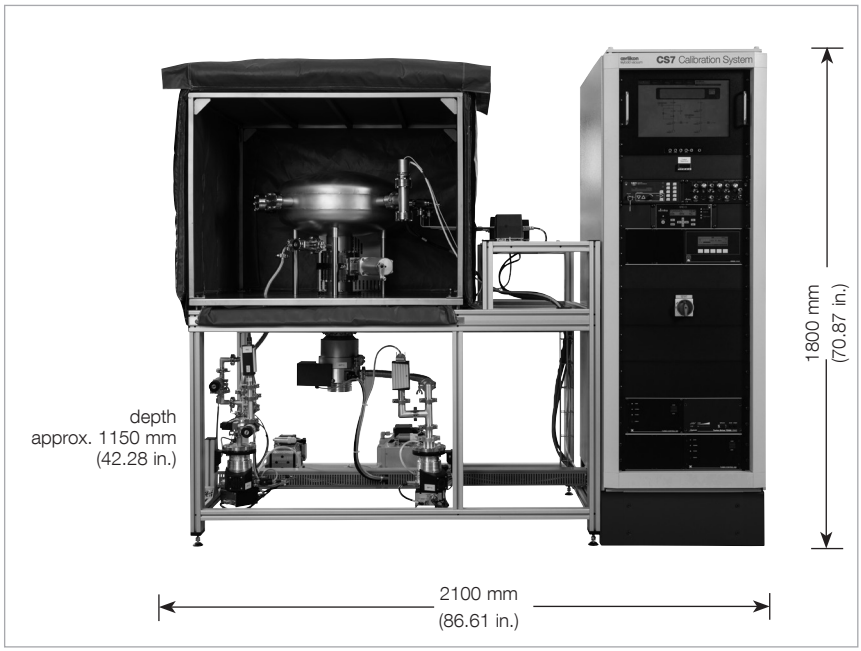

CS7 calibration system

Advantages to the User

- Vacuum gauges and measurement systems of any make may be calibrated
- Designed in accordance with DIN 28 418 resp. ISO/DIS 3567
- Transfer standards with PTB-, DAkkS- or factory certificate
- Easier DIN/ISO 9000 approval
- Reliable and reproducible measurements
- Quick start-up
- Measurement system free of hydrocarbons through the utilisation of dry compressing vacuum pumps
- Simple operation
- CE approval

Products

Technical Data		Calibration System		
		CS3	CS3 mobil	CS7
Calibration range	mbar (Torr)	1000 to 1 x 10^{-3} (750 to 0.75 x 10^{-3})	1000 to 1 x 10^{-3} (750 to 0.75 x 10^{-3})	1000 to 1 x 10^{-7} (750 to 0.75 x 10^{-7})
Pressure measurement range	mbar (Torr)	1000 to 2 x 10^{-6} (750 to 1.5 x 10^{-6})	1000 to 2 x 10^{-6} (750 to 1.5 x 10^{-6})	1000 to 2 x 10^{-9} (750 to 1.5 x 10^{-9})
Vacuum chamber connections (in brackets: disposable for user)		5 (3) x DN 16 ISO-KF 1 (0) x DN 25 ISO-KF	5 (3) x DN 16 ISO-KF 1 (0) x DN 25 ISO-KF	3 (0) x DN 16 CF 7 (5) x DN 40 CF
Pump system		Turbomolecular pump and diaphragm vacuum pump	Turbomolecular pump, two-stage rotary vane vacuum pump and pump bypass (manual valves)	Two turbomolecular pumps and diaphragm vacuum pump
Fixed / mobile		fixed	mobile (with castors)	fixed
Gas inlet		via variable leak valve	via variable leak valve	via variable leak valve
Extra pump system for admitting gas		no	no	yes
Heater for the vacuum chamber		no	no	yes

Application examples:
Which pressure sensors may be calibrated with which system?

Type of Sensor	Calibration System	
	CS3 / CS3 mobile	CS7
Diaphragm sensors		
BOURDONVAC	■	■
Capsule vacuum gauges	■	■
DIAVAC DV 1000	■	■
DI/DU 200/201/2000/2001	■	■
CTR 90, CTR 91, CTR 100 (1000 – 1 Torr full scale)	■	■
CTR 91 (0.1 Torr full scale) / CTR 101		■
THERMOVAC sensors		
TR 301, TR 306	■	■
TR 211, TR 216, TTR 211, TTR 216, TTR 90, TTR 91, TTR 96, TTR 100, TTR 101	■	■
SRG/VISCOVAC sensor (spinning rotor gauge)		
VK 201, SRG		■
PENNINGVAC sensors		
PR 25, PR 26, PR 27, PR 35, PR 36, PR 37, PTR 90, PTR 225		■
IONIVAC sensors		
ITR 90, ITR 100, ITR 200		■
IE 414, IE 514		■

Ordering Information	Calibration System	
	CS3 / CS3 mobile	CS7
	Part No.	**Part No.**
Ordering information and options	**upon request**	**upon request**

Notes